NOTE(S)

1. A 12Volt DC (Direct Current) power supply must be used. This is different than a traditional 12-16VAC Doorbell Transformer. If you connect any AC power supply to this sequencer board, it WILL destroy it.
2. Any simple button can be used. Lighted doorbell buttons can NOT be used. The sequencer sees the signal from a lighted button as ALWAYS closed.
3. EMAIL doorbell@RiddledTV.com for any questions or for purchase information.

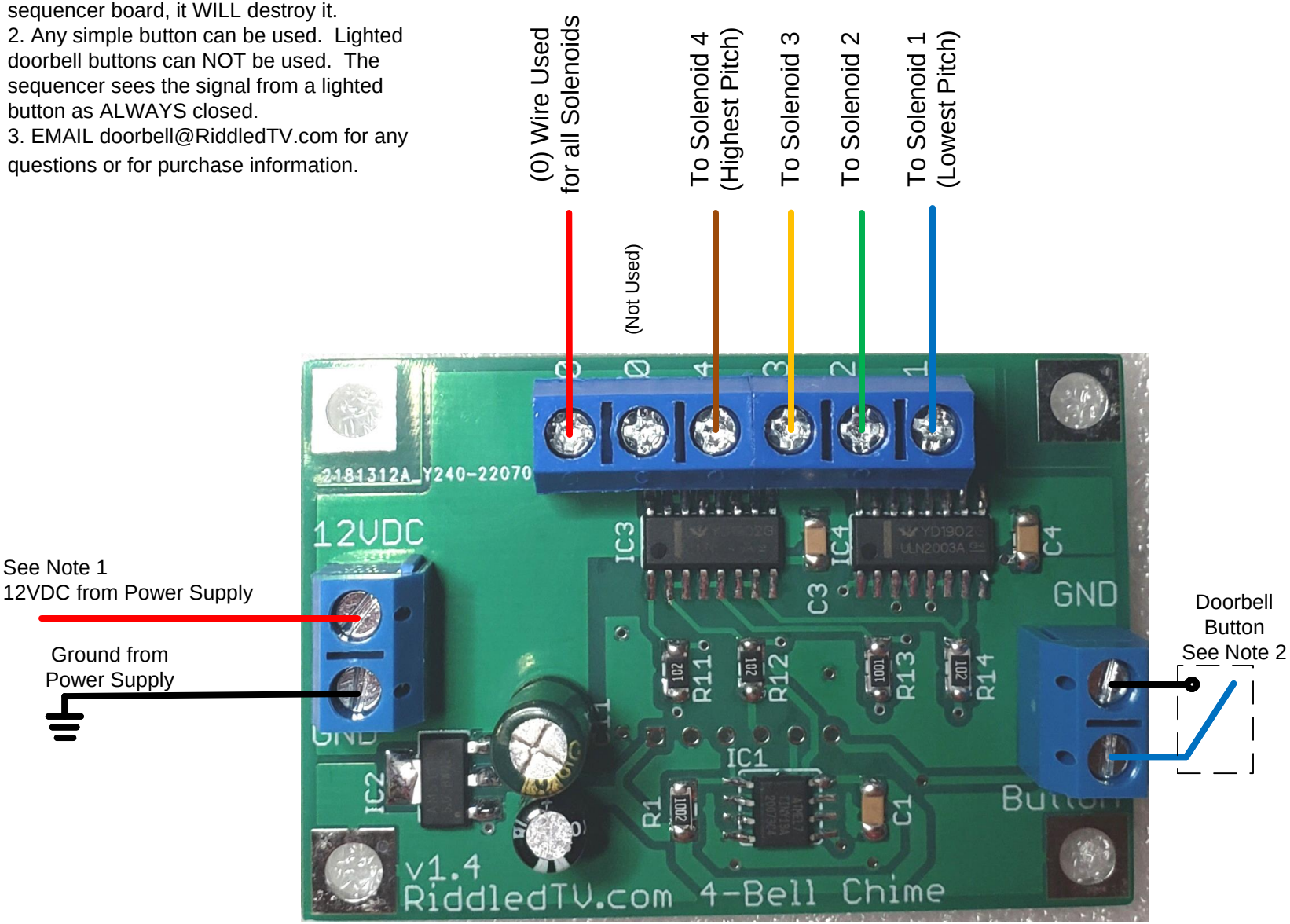

DOORBELL CHIME SEQUENCER

Rev	Date	Description

Designed:	Jim Riddle
Drawn:	Jim Riddle
Date:	Dec 13, 2022

DRAWING TITLE

4-NOTE DOORBELL CHIME SEQUENCER - CONNECTION DIAGRAM

DRAWING NUMBER

DBELL-1